Toggle Switch

N&H Technology GmbH

DIWO-7116 / 7119

The metal toggle switches feature a robust metal housing, high switching capacity and integrated RGB LED illumination. The switches are available with a cylindrical toggle lever or a low-profile rocker actuator and offer two or three switching positions.

With IP67 front panel protection, vibration resistance and an operating temperature range of −40°C to +85°C, these switches are suitable for industrial control panels and HMI applications in demanding environments.

Order-Code:

DIWO-71 Ø- ★ - 11■ - ◊ - ▲ - ○

Ø	Mounting (mm)	16 / 19
★	Head Shape	C1-C1 / B1-B6
■	Switch Function	2: two-position / 3: three-position
◊	Lamp structure	41: Common cathode (standard) 42: Common anode No letter means without light
▲	LED Voltage	5~6V / 12~24V (AC/DC)
○	Material	S: Stainless steel A: Al alloy (Black)







Feature	Type B	Type C
Actuator design	Cylindrical toggle lever	Low-profile rocker actuator
Mounting diameter	Ø 16 / 19 mm	Ø 16 / 19 mm*
Housing material	Stainless steel or black aluminum alloy	Stainless steel
Laser engraving options	B1–B6	C1–C2
RGB illumination	Available	Available
Non-illuminated version	Available	Available

*Type C can be adapted from a 16 mm to a 19 mm mounting diameter using the supplied adapter nut.

Front Shape	Flat
Base Material	Polyamide (PA), V-0
Terminal	Pin Terminal / 2.8 × 0.5 mm
Protection Class	IP67, front panel
Vibration resistance	30–50–30 Hz
Vibration amplitude	0.15 mm
Operating Temperature	−40°C to +85°C
Resistance to soldering heat	320°C / 3 s
Operating Humidity	45–85% RH, non-condensing
Contact Resistance	≤ 50mΩ
Insulation Resistance	≥ 1,000 MΩ at 500 V DC
Dielectric strength	1,500 V AC / 50 Hz / 60 s
Operating force	Approx. 3 N
Torque	Approx. 0.6 Nm
Maximum panel thickness	8 mm
Mechanical Life	≥ 500,000 cycles

Head Shape

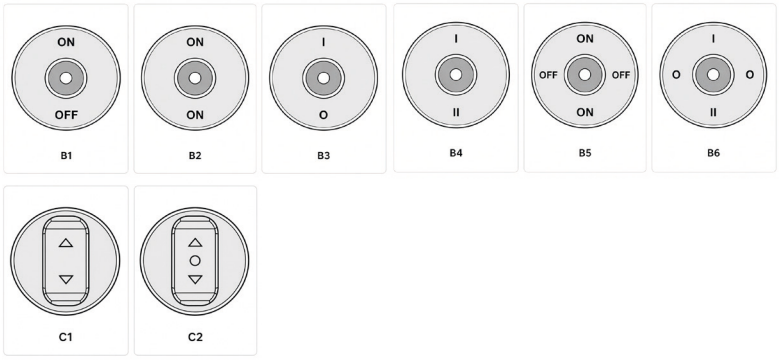

Switch Type

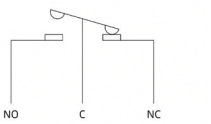

1NO1NC

Utilization category / Load type	≥ 50,000 cycles	10,000 cycles
AC-12 – Resistive load	250 V AC / 15 A	250 V AC / 20 A
AC-15 – Inductive load	250 V AC / 3 A	250 V AC / 5 A
DC-12 – Resistive load	250 V DC / 30 A	-

Test conditions:

- Resistive load: wirewound resistor
- Inductive load: combination of wirewound resistor and inductance
- Power factor for inductive loads: cos ϕ = 0.7
- Switching interval: 1 s ON / 9 s OFF
- Switching frequency: 6 cycles/min

Gießerallee 21
D - 47877 Willich

Tel. +49 (0)2154 - 8125 0
Fax +49 (0)2154 - 8125 22

www.nh-technology.de
info@nh-technology.de

All product information and technical specifications are based solely on data provided by our manufacturers. Technical properties are not guaranteed unless expressly confirmed in writing by N&H Technology. Specifications are subject to change without prior notice.

DIWO-7116 / 7119



LED Specifications / Tri-color RGB LED	
LED Color	R G B
LED Life	≥ 40.000 h
Rated Current	< 20 mA
Standard LED configuration	Common cathode (41)
Optional LED configuration	Common anode (42)

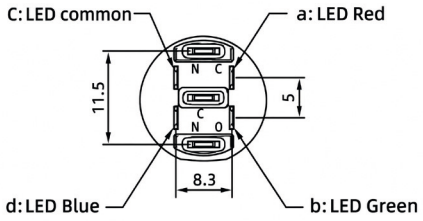

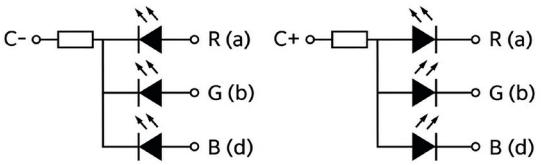

Common cathode (default) Common anode (customized)





Optionales Zubehör: Kabeladapter

DIWO-7116-B

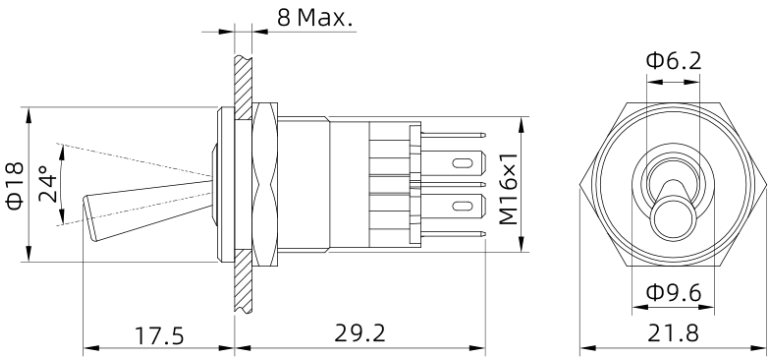

DIWO-7119-B

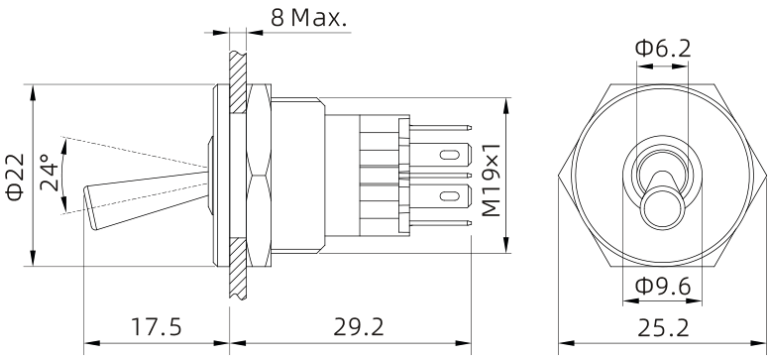

DIWO-7116-C

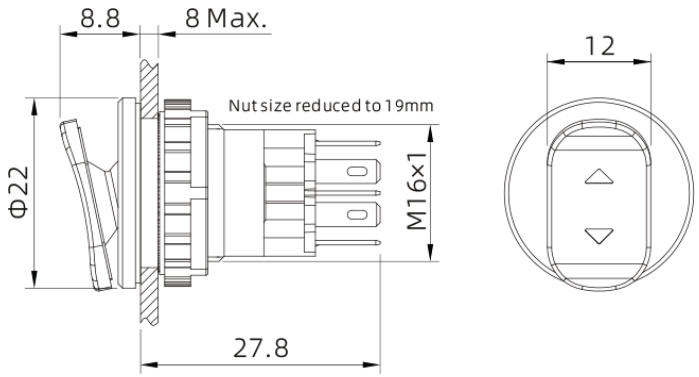

Gießerallee 21
D - 47877 Willich

Tel. +49 (0)2154 - 8125 0
Fax +49 (0)2154 - 8125 22

www.nh-technology.de
info@nh-technology.de

All product information and technical specifications are based solely on data provided by our manufacturers. Technical properties are not guaranteed unless expressly confirmed in writing by N&H Technology. Specifications are subject to change without prior notice.